Fiberglass Conductor Supports

ALUMA-FORM®

1-1/2” Conductor Supports

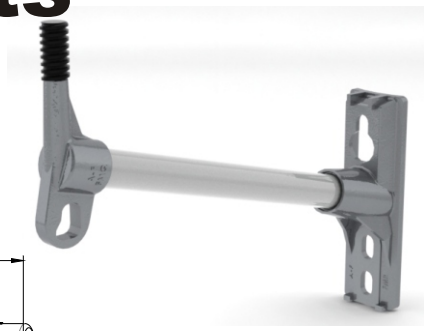

Vertical Pin w/ Hook

Material Specifications

Pole Gain
- 65-45-12 Ductile Iron, hot-dipped galvanized per ASTM A153 (8” t& 10” mounting centers)
- Back-to-back & Jump proof pole gain options
- Accepts 5/8” pole mounting hardware
- Can be banded using the Aluma-Form Bolt-A-Band banding system

End Fitting
- 65-45-12 Ductile Iron, hot-dipped galvanized per ASTM A153 with Nylon Threads

Fiberglass Rod
- 1-1/2” diameter Super-Smooth, veiled gray polyester rod
With added ultraviolet protection

Pins Threads
- Pins are available with 1” or 1-3/8” Nylon Threads.

“-1” = 1” Nylon Threads
“-2” = 1-3/8” Nylon Threads

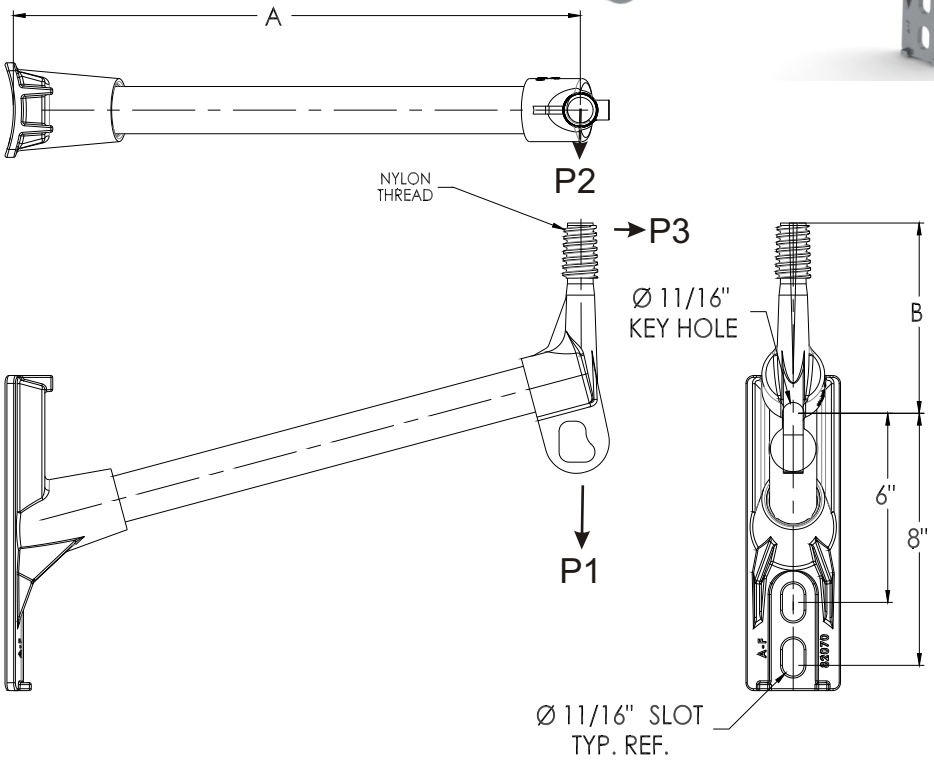

1-1/2" Conductor Support - Vertical Pin w/ Hook								
Catalog Number	Rod Diameter	"A"	"B"	Nylon Thread Diameter	Ultimate Load (lbs) P1 Vert	Ultimate Load (lbs) P2 Long	Ultimate Load (lbs) P3 Trans	Weight (lbs)
Back to Back Pole Gain								
F1CS-MV-A12-BVP-1	1-1/2"	12	4 1/2	1"	2100	1300	2000	7.1
F1CS-MV-A13-BVP-1	1-1/2"	13	4 5/8	1"	1950	1200	2000	7.2
F1CS-MV-A15-BVP-1	1-1/2"	15	5 1/4	1"	1700	1100	2000	7.5
F1CS-MV-A18-BVP-1	1-1/2"	18	6	1"	1500	900	2000	7.9
F1CS-MV-A21-BVP-1	1-1/2"	21	6 3/4	1"	1200	800	2000	8.3
F1CS-MV-A24-BVP-1	1-1/2"	24	7 1/2	1"	1000	700	2000	8.7
Jump Proof Pole Gain								
F1CS-MV-A12-JVP-1	1-1/2"	12	4 1/2	1"	2100	1300	2000	7.1
F1CS-MV-A13-JVP-1	1-1/2"	13	4 5/8	1"	1950	1200	2000	7.2
F1CS-MV-A15-JVP-1	1-1/2"	15	5 1/4	1"	1700	1100	2000	7.5
F1CS-MV-A18-JVP-1	1-1/2"	18	6	1"	1500	900	2000	7.9
F1CS-MV-A21-JVP-1	1-1/2"	21	6 3/4	1"	1200	800	2000	8.3
F1CS-MV-A24-JVP-1	1-1/2"	24	7 1/2	1"	1000	700	2000	8.7

Notes:
1. Custom lengths available, contact factory or local sales representative.
2. Silicone Coating - contact factory or local sales representative
3. For 1-3/8” Nylon Threads change “-1” to “-2” on the end of the catalog name.